Specification (Test Condition, 25℃)

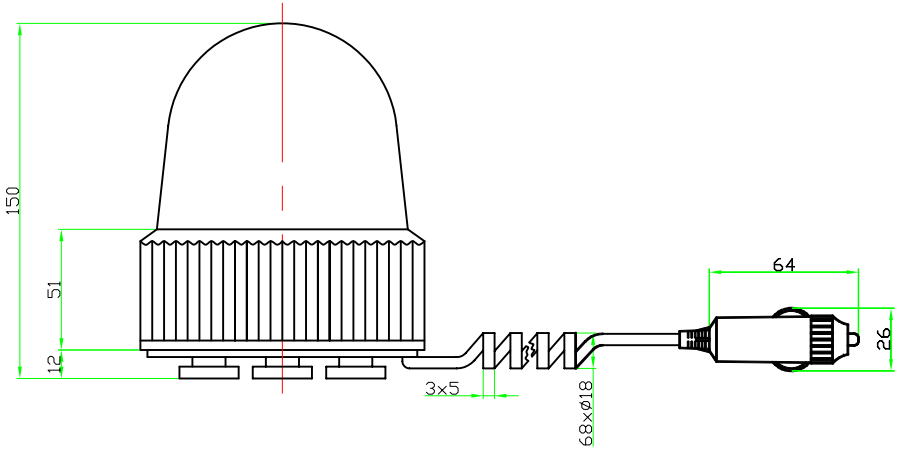

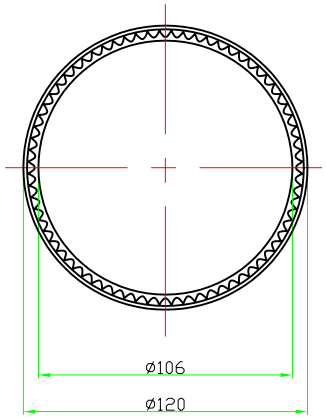

1.Materials/Color ..... Base：ABS/Black
..... Lens：Acrylic/Amber、Blue、Clear、Red
2.Rated Voltage..... 12VDC
3.Operating Voltage..... 8-15VDC
4.Max.Rated Current..... 1850mA/12VDC
5.Rated Rotate Times ..... 120±15 Per Minute
6.Operating Life ..... 500 Hours Continuous Duty At 12VDC
7. Operating Temperature Range ..... -20 ~ +60℃
8. Wires Connection ..... Red +12VDC
..... Black GND
9. Weight ..... 465±20 g

No.	DESCRIPTION	APPROVED	DATE

TOLERANCES UNLESS NOTED OTHERWISE
.X ±
.XX ±
.XXX ±
90° FORMED +2° ANGLES -1°
FIRST ANGLE PROJECTION

APPROVALS	DATE
DRAWN	
CHECKED	
APPROVED	04.01.07

DSW NINGBO DSW AUDIO & SECURITY EQUIPMENT
http://www.eastacoustic.com

Electronic Strobe Light
ESB-120

UNIT	DWG NO.		
mm	E2.840.007		
SCALE	SHEET	VER	
NOT TO SCALE		1.0	